Natural Play – Adventure Mound

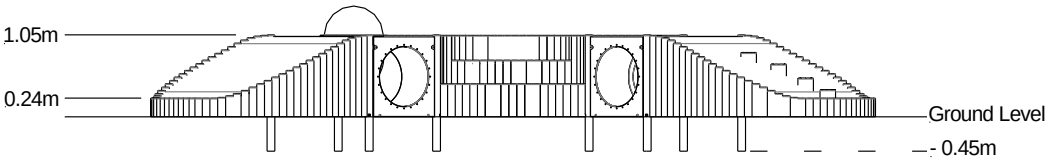

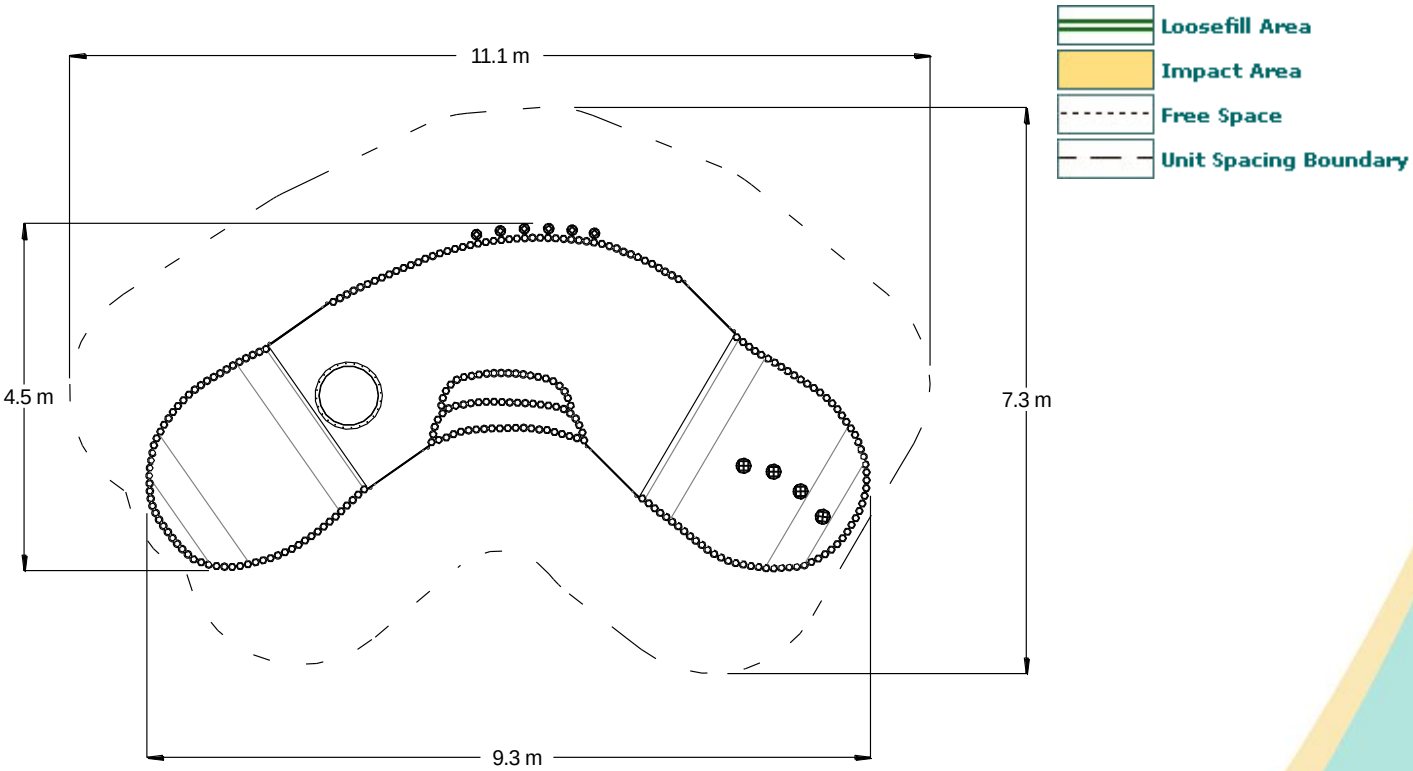

Technical Information

Equipment Dimensions	
Length / Width / Height	9.3m x 4.5m x 1.45m
Surfacing and Area Required	
Minimum Space Required L/W/H	11.1m x 7.3m x 2.8m
Max Gradient Of Ground	1:20
Free Height Of Fall	1.05m
Impact Area - Wetpour	n/a
Loosefill At 150mm Bark / Cushionfall / Sand	n/a
1m X 1m Rubber Tiles	n/a
Installation Information	
overall weight	2100kg
heaviest part	76kg
largest part	2.4m x 1.6m x 1.1m
longest part	2.4m
concrete required	$1.2m^3$

KITEMARKED TO BS EN 1176